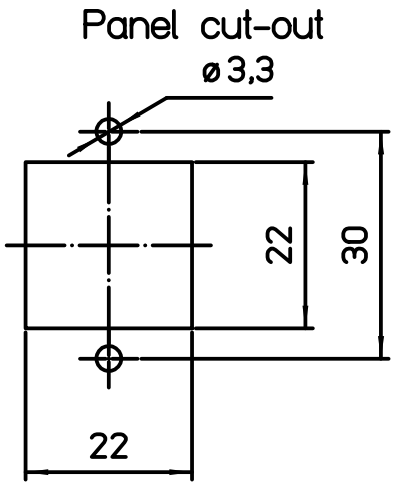

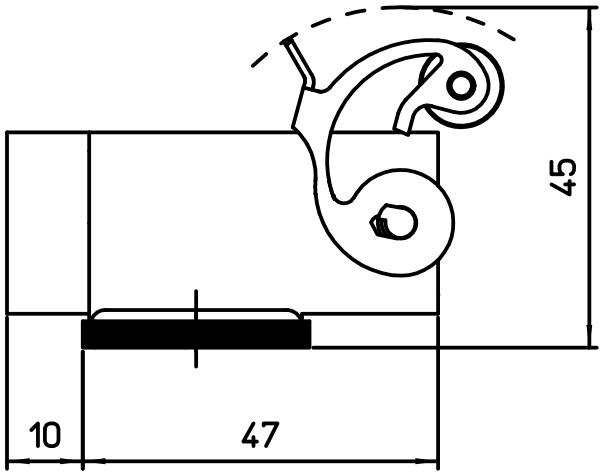

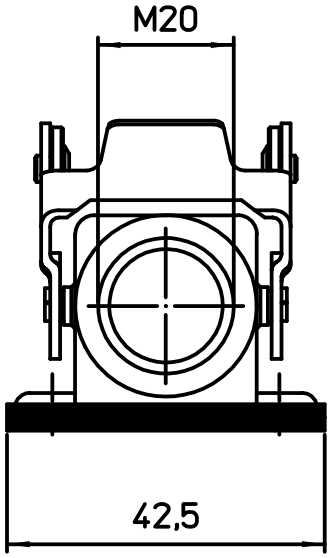

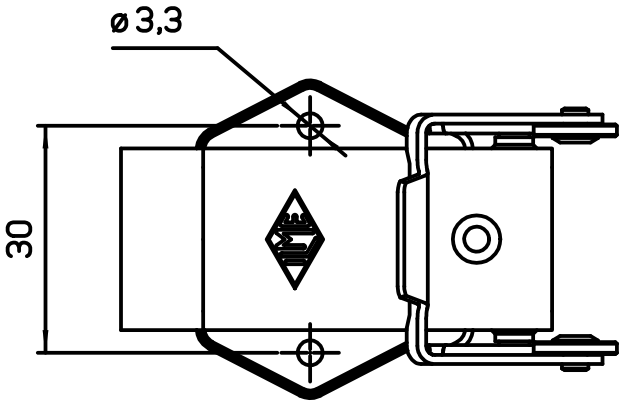

Diritti riservati All rights reserved

dimensions in mm	MKAXS IAP20	Scale
Date 29/08/19	Metal angled bulkhead housing, stainless steel lever, M20 - EMC	1:1
Sign. D.Cominelli		